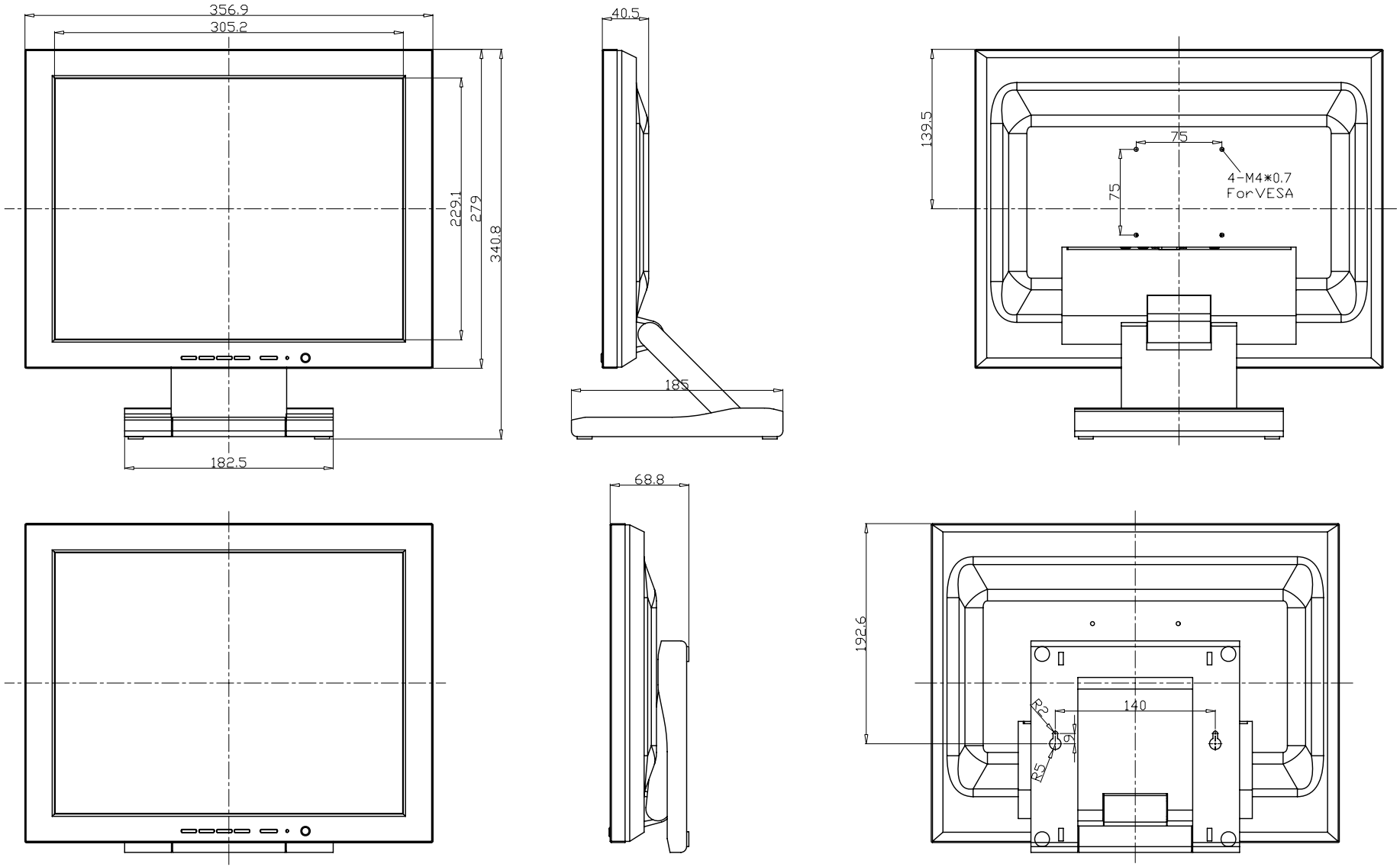

AD/BOARD	2023L	MODEL	L1562	泓瑜科技有限公司 WINSONIC TECH. CO., LTD.	
INVERTER		PART NO.		PART NAME	ASSEMBLY
KEY PAD					
PANEL:		MATERIAL	DATE 12/16/2008	APRROVED	DRAWN JACK
				REV.	
				DWG SIZE	