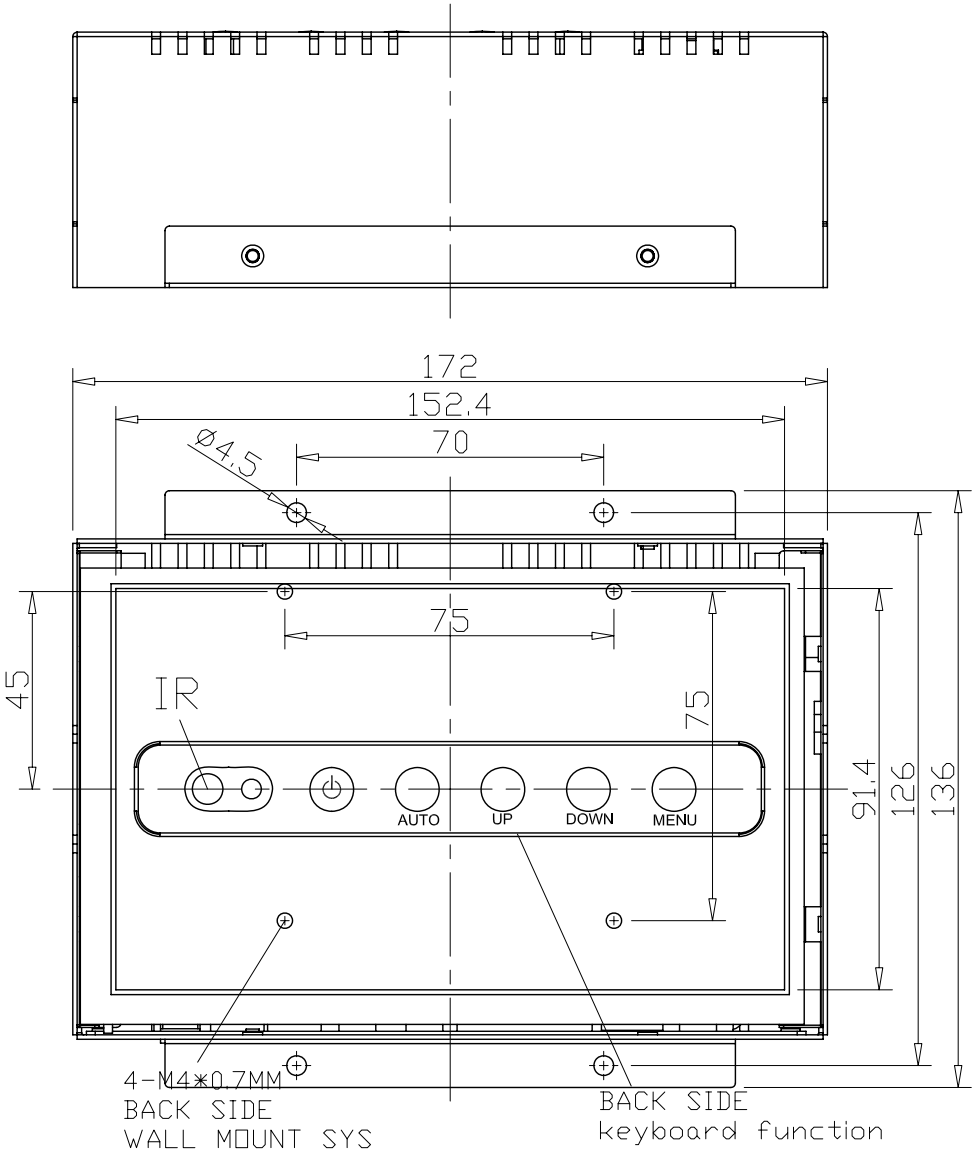

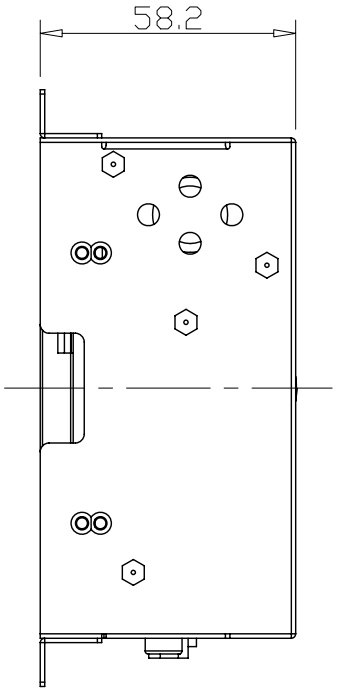

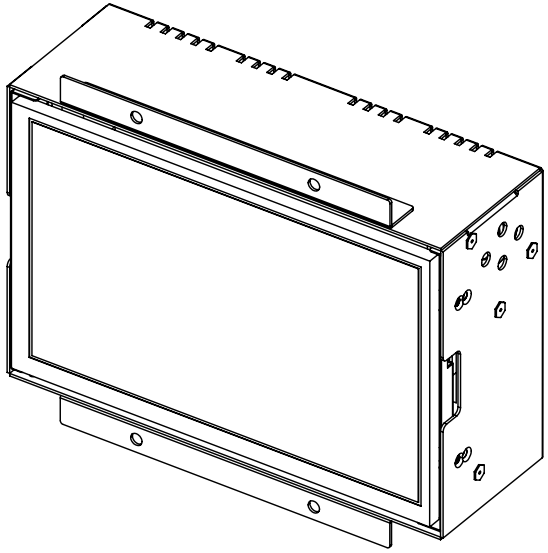

AD/BOARD	2023L/2023-9906/2523BVL/2523TTL	MODEL	OF0706	泓瑜科技有限公司 WINSONIC TECH. CO., LTD.	
INVERTER					
KEY PAD	PCBKEY019A0	PART NO.		PART NAME	Assembly
PANEL: AU-A070VW01 AU-C070VW02		MATERIAL	SECC	DATE	12/21/2007
				APRROVED	DRAWN JACK
				REV.	V3
				DWG SIZE	