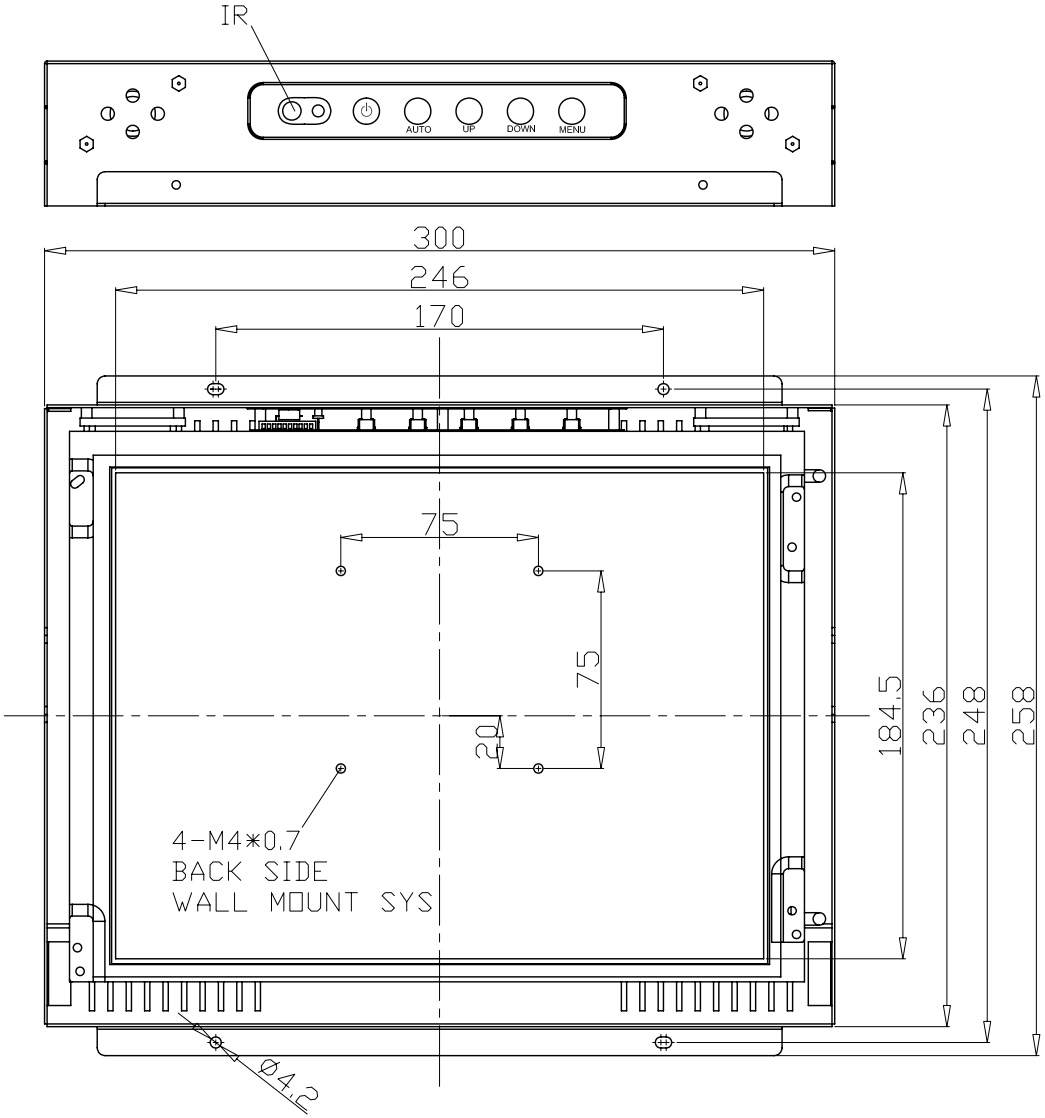

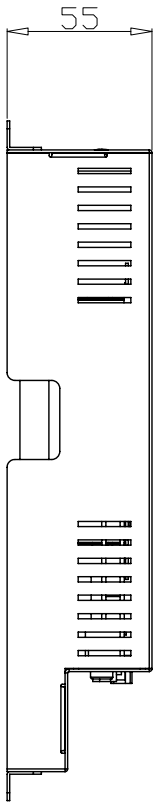

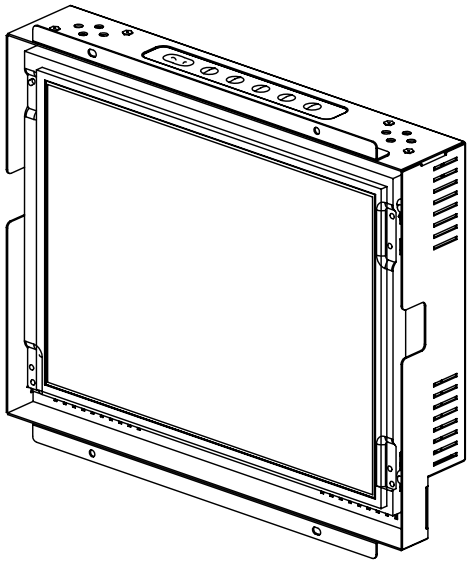

DVI READY

P.S:1.前殼、後殼與後蓋組合鎖附後一起烤漆.
2.表面黑織紋烤漆.
3.The attention please,if panel is the CMO or TOSHIBA.
The panel-bk right side need rubber washer 1mm.

AD/BOARD	2023L/2023-9906
INVERTER	TIP017WS-01
KEY PAD	PCBKEY019A0

PANEL:
AU-G121SN01
CMO-G121X1-L01
SHARP-LQ121S1DG61_SP_012706
TOSHIBA-LTD121LA#SG

MODEL	OF1205		
PART NO.			
MATERIAL	SECC	DATE	10/15/2007

泓瑜科技有限公司
WINSONIC TECH. CO., LTD.

PART NAME	Assembly		
APRROVED		DRAWN	JACK

REV. A
DWG SIZE A4