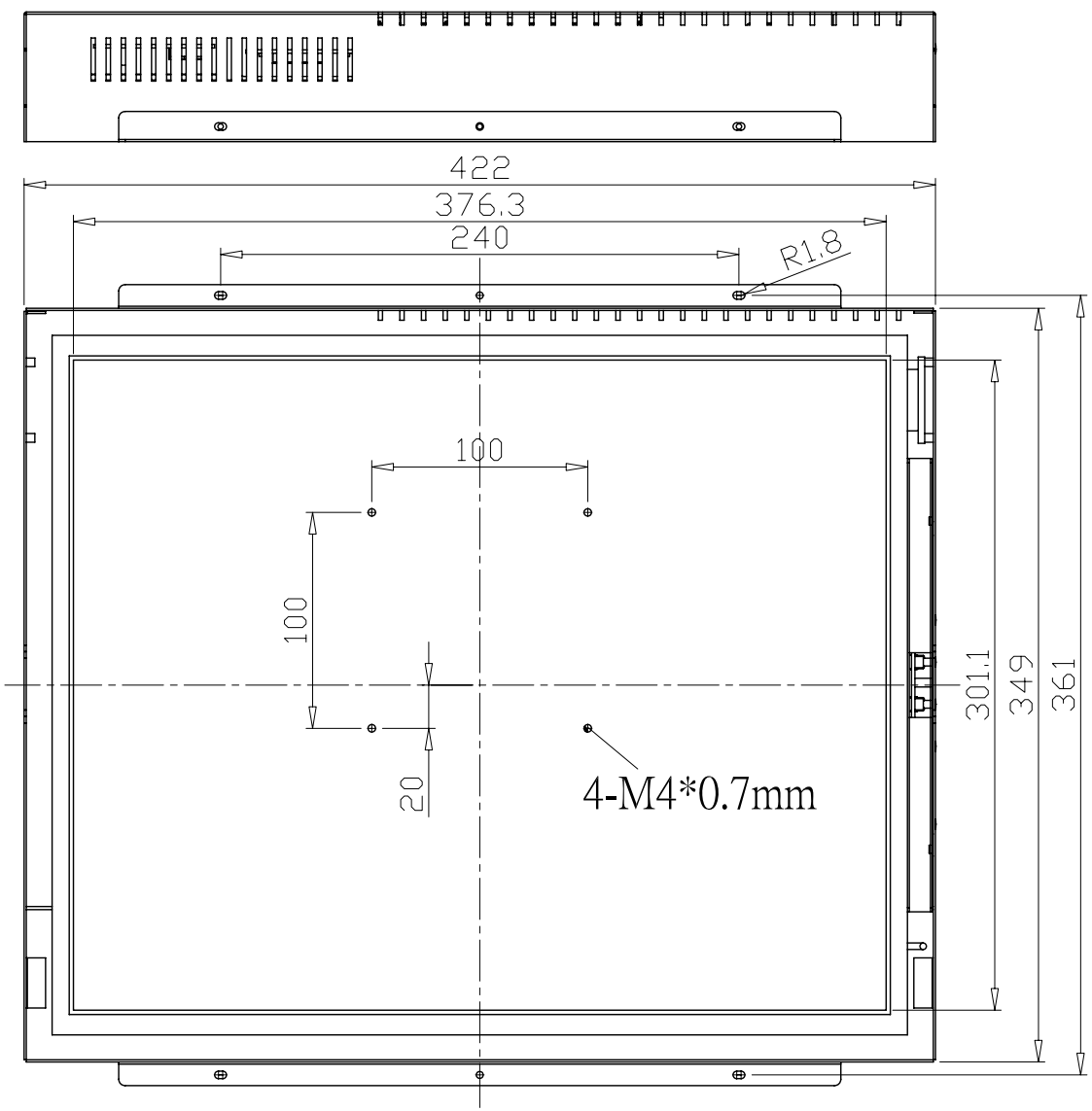

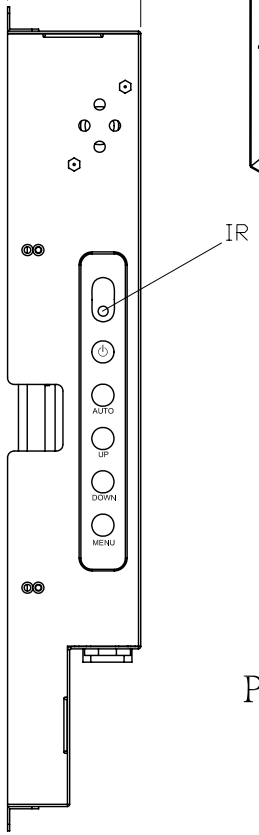

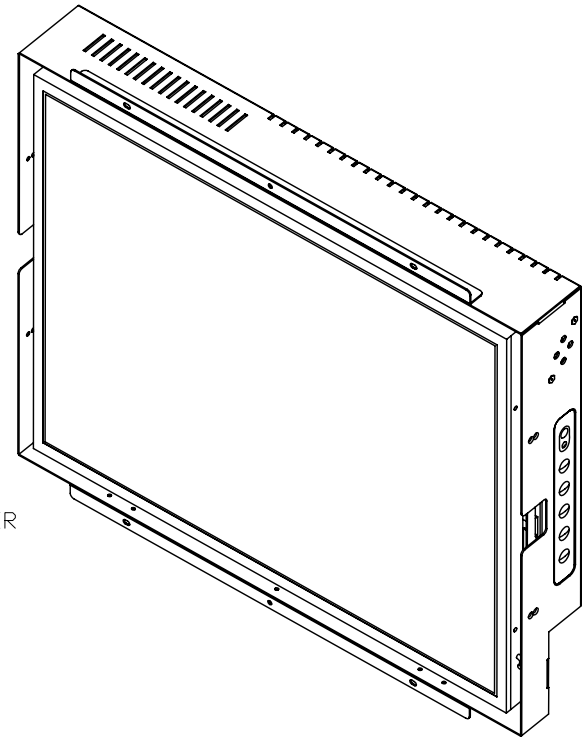

P.S:1.前殼、後殼組合後一起烤漆.
2.表面黑織紋烤漆.

DVI READY

AD/BOARD	2023L/2023-9906/2523TTL/2523BVL	MODEL	OF1905	泓瑜科技有限公司 WINSONIC TECH. CO., LTD.	
INVERTER	TIP017WS-01				
KEY PAD	PCBKEY019A0	PART NO.		PART NAME	Assembly
PANEL: AU-M190EN04 V7 PS v0.2 AU-M190EG01 V0 PS v0.4 CMO-M190E5-L0B		MATERIAL	SECC	DATE	09/25/2007
		APRROVED		DRAWN	JACK
		REV.	A	DWG SIZE	A4